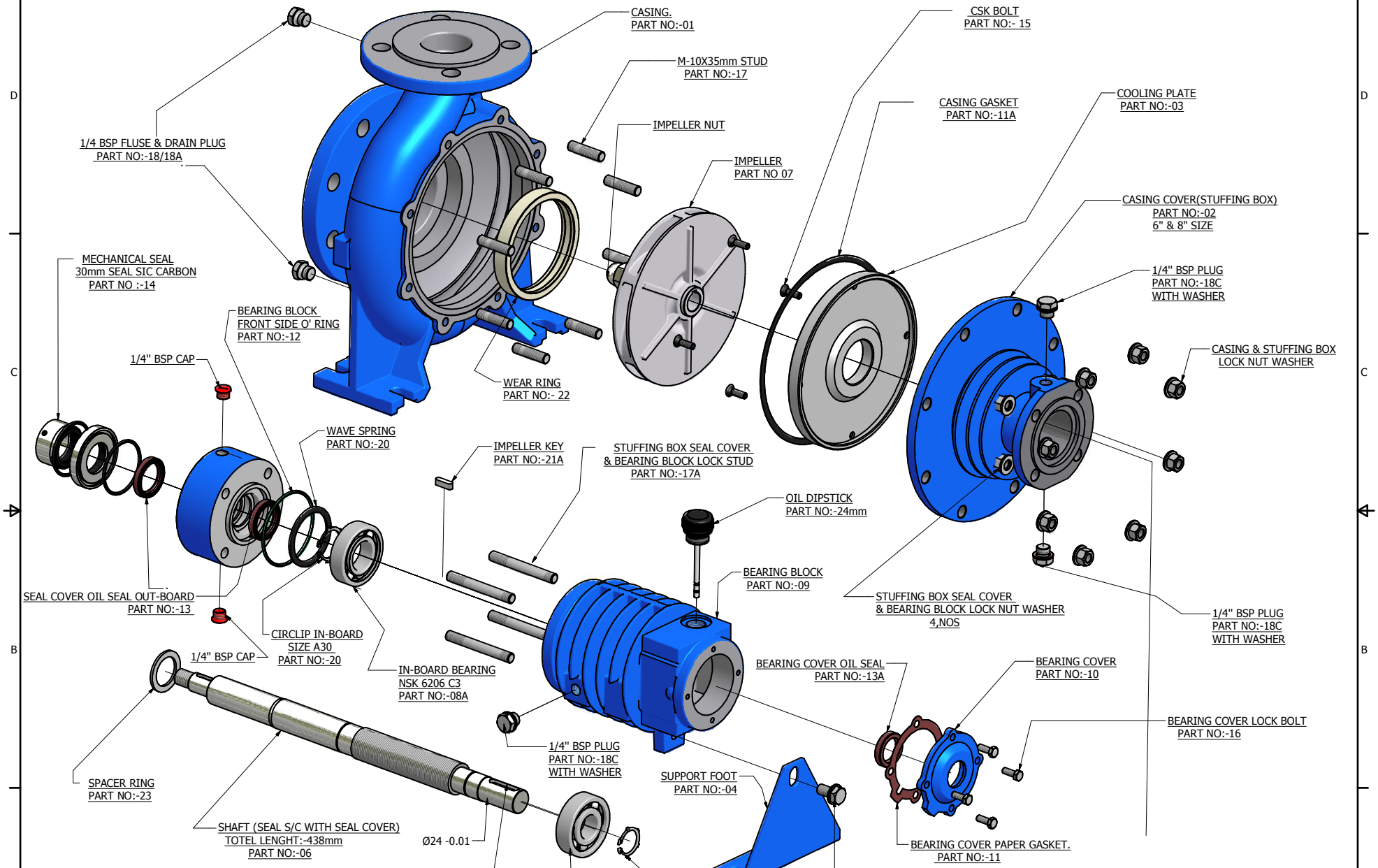

NOTES:-

ALL DIMENSION ARE IN mm.

DRAWN ASHISH	7/25/2013	**Investa Pumps Pvt. Ltd.** 762 Phase !!, G.I.D.C. Gundlav, Dist. Valsad
CHECKED		
QA		TITLE:- T-CIP 1 PUMP ASSEMBLEY DETAIL
MFG		
APPROVED		
		SIZE C / DWG NO . / REV 0
		SCALE / SHEET 1 OF 1